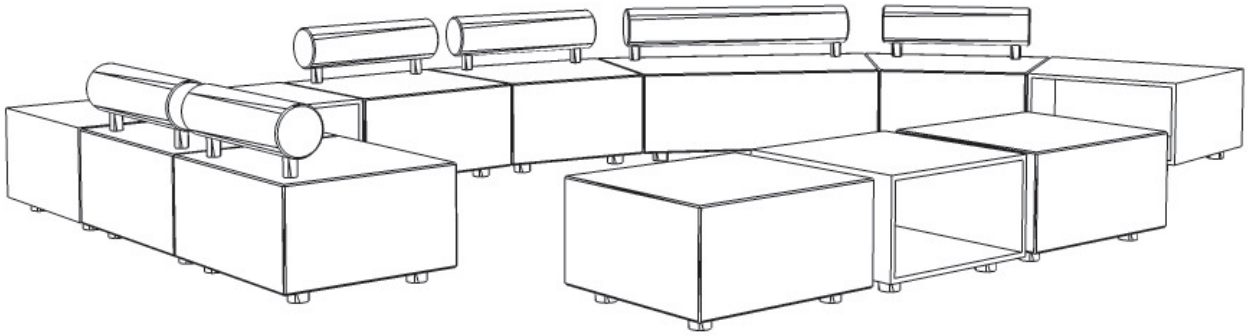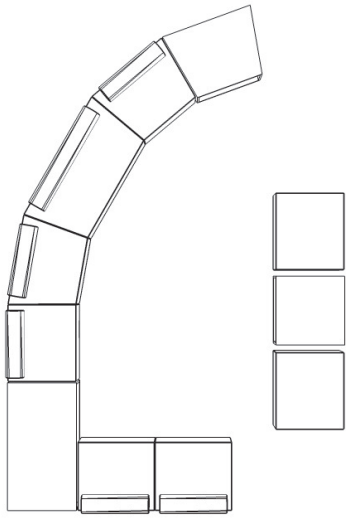HAWORTH®